DIMNS MARKED DENOTES ⚠ SAFETY/REGULATION (F) CRITICAL FIT/FUNCTION (M) MAJOR FIT/FUNCTION (M2) MINOR FIT/FUNCTION

PART NO	FINISH GRIND Ø	PLATING THK. BEFORE POST CHROME GRINDING	PLATING THK. AFTER POST CHROME GRINDING	Ø 'C'	CORROSION RESISTANCE
34040725	Ø10.928~10.938	24±4 MICRON	20±4 MICRON	Ø10.960-10.986	UP TO 24Hrs CASS TEST RATING 07

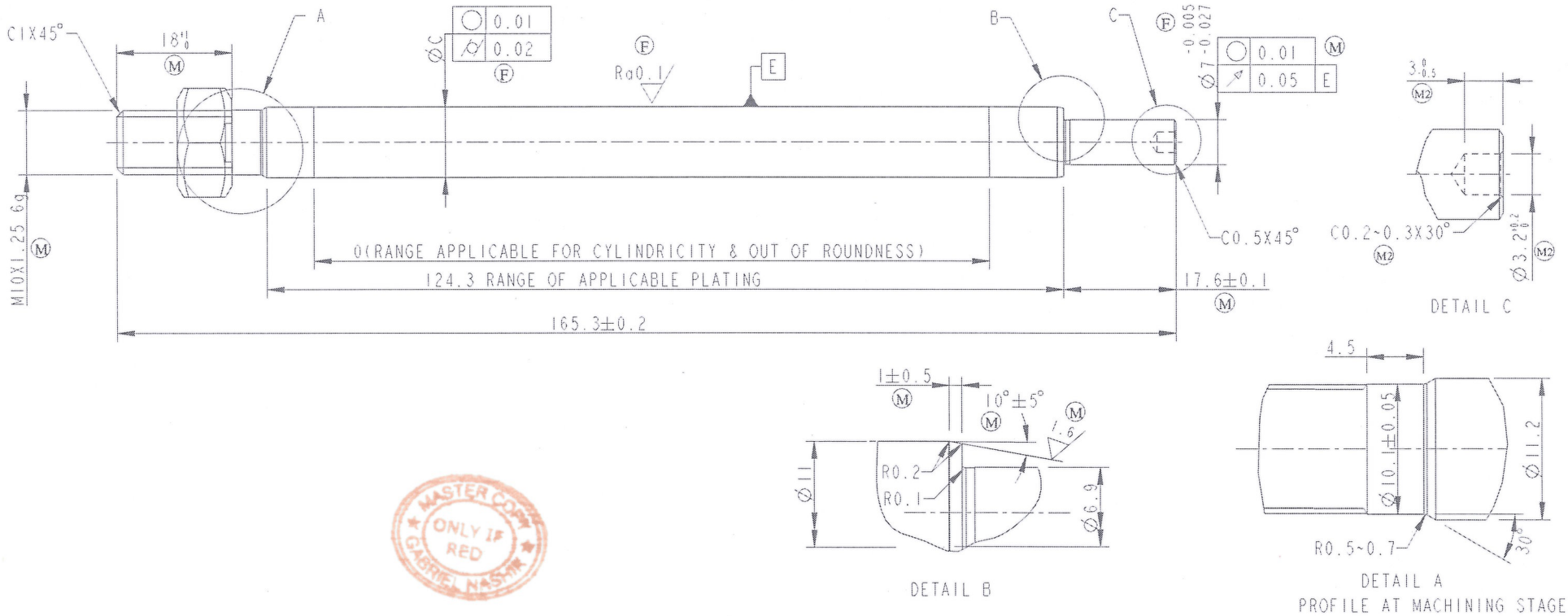

MASTER COPY ONLY IF RED GABRIEL NASIK

NOTES:
1. TO BE GROUND TO FINISH SIZE AFTER PLATING MATERIAL REMOVAL SHALL BE 3 TO 5 MICRON ON DIAMETER
2. UNLESS OTHERWISE SPECIFIED, TOLERANCE IN DIMENTIONS OF MACHINING AREA AS PER PE/GT/001
3. (M) PLATING VALIDATION & SURFACE DEFECT QUALITY CHECK AS PER GSP0103 CHROME HARDNESS : HV800 MIN/25 gms LOAD.
4. PARTING PIP NOT PERMITTED
5. MUST BE NO CHATTER, SCRATCH, ABRASION & BRUISE ON SURFACE OF Ø11
6. MUST BE NO PIN HOLE, ROUGH SURFACE & BLISTER AFTER PLATING
7. THREADING LENGTH TO BE CHECKED BY TIGHTENING NUT.

DATE	REV	ALTERATION	E.C.N.NO
17.08.16	D0	RELEASE FOR PRODUCTION	N 2012
20.07.16	D5	THREAD DIM TO BE CHECK WITH NUT	D475
11.07.16	D4	Ra 0.1 max WAS Rz 0.5 max	D469
03.03.16	D3	DIM 165.3 WAS 157.9 & DIM 124.3 WAS 116.9	D437
28.10.15	D2	LENGTH REVISED	D425
21.08.15	D1	THREADING CHANGE FROM M8 TO M10X1.25	D412
20.08.15	D0	NEW RELEASE FOR APRILIA RSA	D411

SUPERSEDES : 34040725/REV/D5
GENERAL TOLERANCE ASPER : PE/GT/001 –
DESIGN SOURCE REF.
RELEASE FOR: ☐ COSTING ☐ PROTOTYPE ☐ DTS ☐ PRE-PRODUCTION ■ PRODUCTION

GABRIEL INDIA LTD.

SCALE	SHEETS	FINISH:	MASS:
1.5	1 / 1	REF TABLE	(101gms)

DRAWN BY: JSN
DATE: 17.08.16
CHECKED BY: VVD
DATE: 17.08.16
APPROVED BY: SAT
DATE: 17.08.16

NAME:– PISTON ROD APRILIA RSA
MATERIAL:– 3401010 AS PER GP 136-5
PART NO:– 34040725
REV. 00

ALL DIMENSIONS ARE IN MM. | NO MANUAL ALTERATION | DO NOT SCALE | IF IN DOUBT PLEASE ASK | SIZE : A3

FILE ARCHIVE LOCATION: 20

CONFIDENTIAL: THIS DRAWING AND THE INFORMATION THEREIN ARE THE PROPERTY OF GABRIEL INDIA LTD., AND SHALL NOT BE REPRODUCED, COPIED RECORDED IN ANY MEDIA, USED FOR ANY OTHER PURPOSE OR DELIVERED AND/OR DISCLOSED TO ANY THIRD PARTY WITHOUT WRITTEN CONSENT OF GABRIEL.